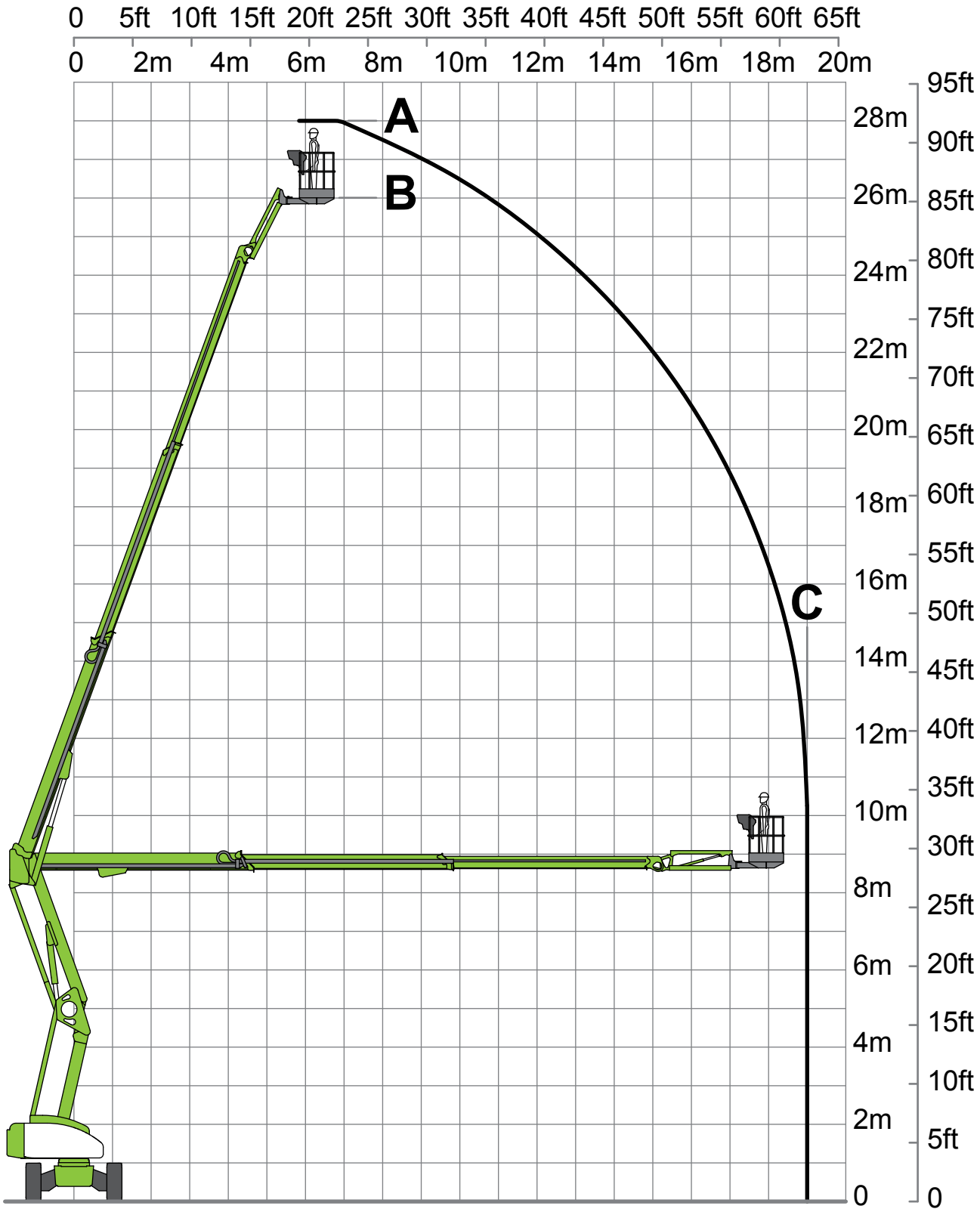
0 5ft 10ft 15ft 20ft 25ft 30ft 35ft 40ft 45ft 50ft 55ft 60ft 65ft
0 2m 4m 6m 8m 10m 12m 14m 16m 18m 20m
A
B
C
28m 26m 24m 22m 20m 18m 16m 14m 12m 10m 8m 6m 4m 2m 0
95ft 90ft 85ft 80ft 75ft 70ft 65ft 60ft 55ft 50ft 45ft 40ft 35ft 30ft 25ft 20ft 15ft 10ft 5ft 0

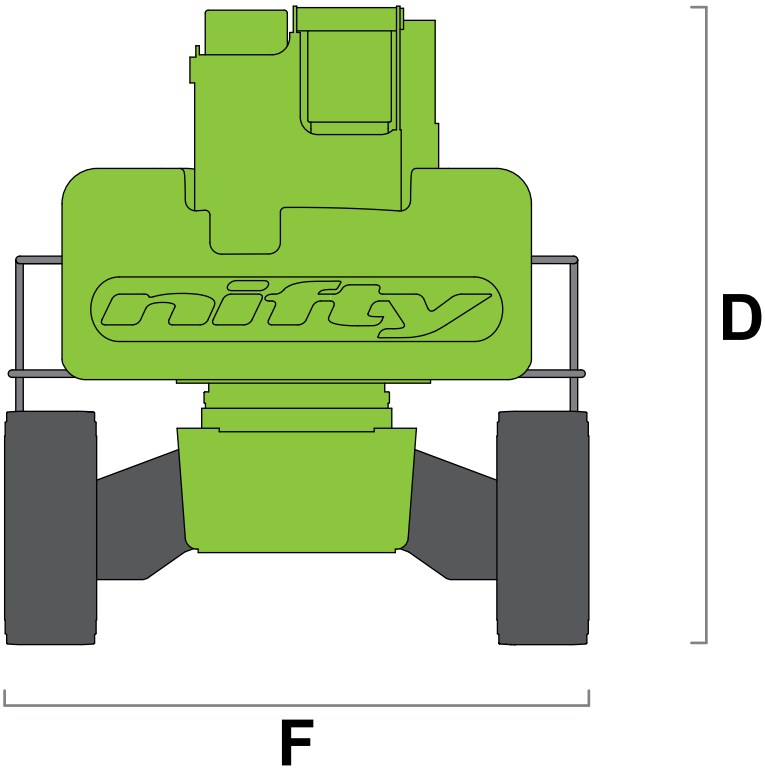
nifty
D
F

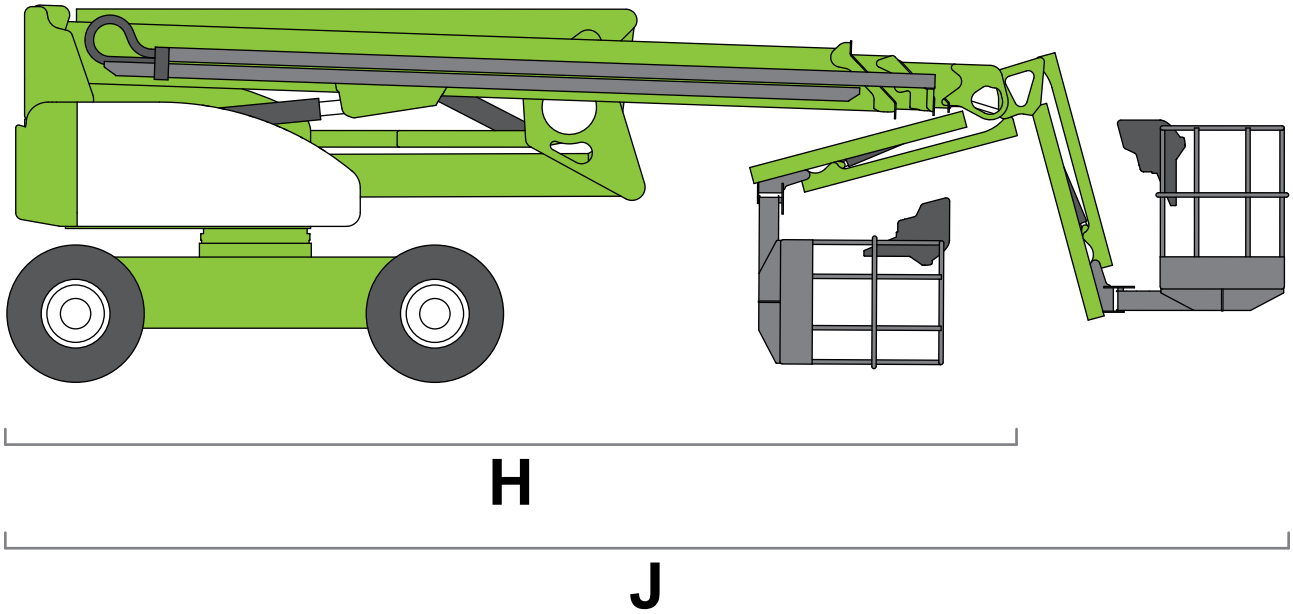
H
J